Manual

Note:When the compressor is shut off,it needs 3 minutes to restart.
Mode selection key:Select working mode.When in auto mode,the system will work like heat mode if the room temperature is below 21℃,or work like cool mode if room temperature is up than 27℃.
Fan selection key:Select fan speed.The fan speed will be low when in dry mode,or in heat mode but the compressor is shut off,or in heat mode but the compressor working time less than 3 minutes. In auto fan mode,the fan speed will be high if the difference of setting and room temperture big than 4℃,will be low if the difference less than 2℃.
Temperature setting keys:Be able to set from 16℃-30℃.It will not response in auto mode or dry mode.
Timer selection key:Select timer on,timer off or no timer.
Timer time setting keys:Set 1-16 hours.
Swing key:Select swing on or off.
Sleep key:Will shut off in 8 hours.
Too cool/Too warm keys: Only effecfive in auto mode.Be able to adjust the setting temperature 1℃ up/down from 25℃ when depressing once the key.
ON/OFF key:Control on or off.

QD-U02B+(M)
UNIVERSAL A/C CONTROL SYSTEM

NO.W-E-00119

QD-U02B+(M)

UNIVERSAL A/C CONTROL SYSTEM

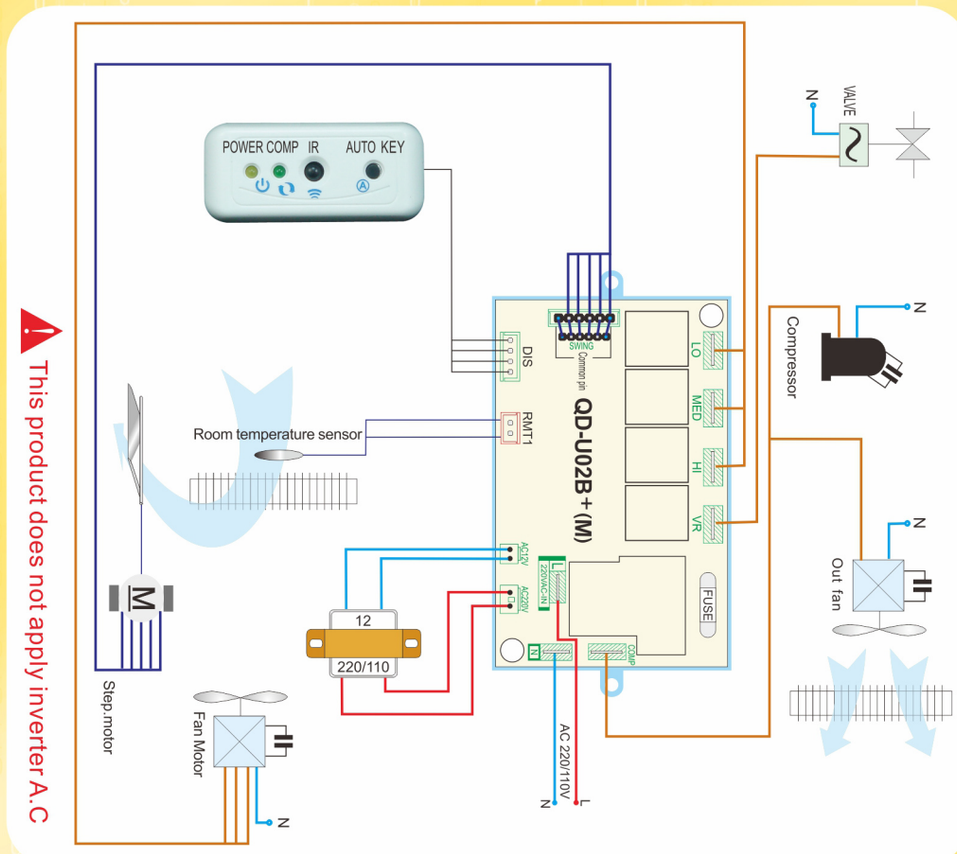

This product does not apply inverter A.C

1、Avoid strong light before IR receiver
2、The common pins of swing socket are 12V output. The common pin of step motor should be inserted into one of the common pins of swing socket.If the direction of step motor is wrong,insert the common pin of swing socket.

QD-U02B+(M)

UNIVERSAL A/C CONTROL SYSTEM

MADE IN CHINA

6 974246 330129

UNIVERSAL A/C CONTROL SYSTEM

MODEL QD-U02B+(M)

NEW

High QuaLity · Full Function · Economic Model

- 5 Working Mode.
- 3 Fan Speed.
- Accurate & Stable Temperature Control
- Accurate & Stable Auto Fan
- Timer Inline/Offline,Sleep
- Periodical Defrost
- Deluxe receiver,nice appearance, work atatus visual display
- Transformer connection upgrade fast plug socket,more convenience for installation
- Auto Restart Function

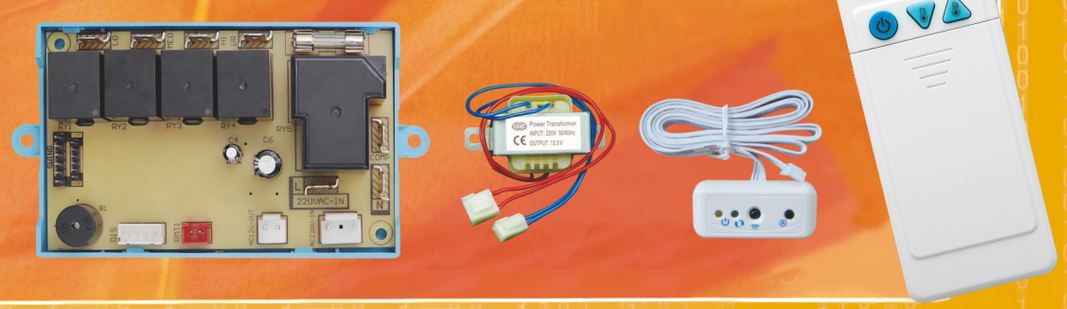

Attention

Please install by certificated technician.
Please test the system before installation.
Please avoid strong light before IR receiver.

QD-U02B+(M)